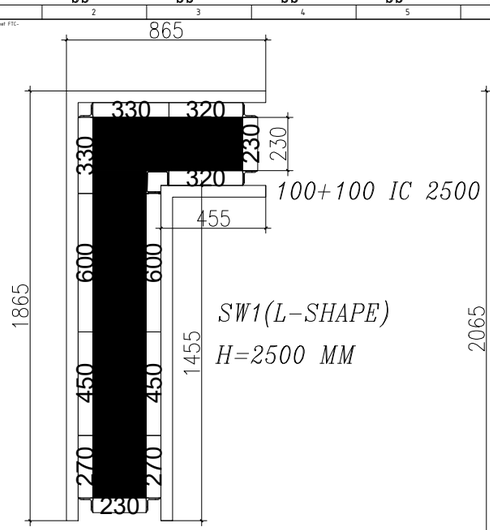

SW1(L-SHAPE)
H=2500 MM

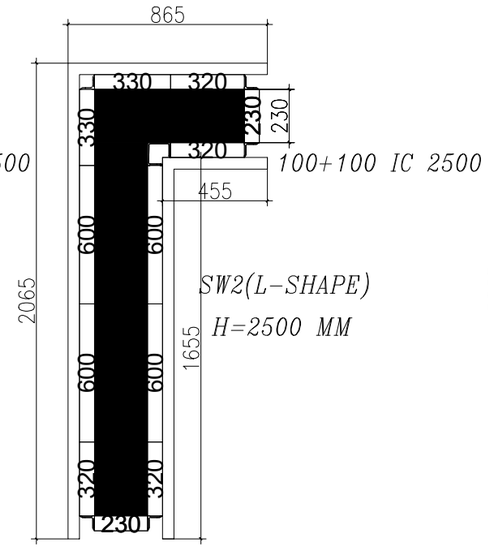

SW2(L-SHAPE)
H=2500 MM

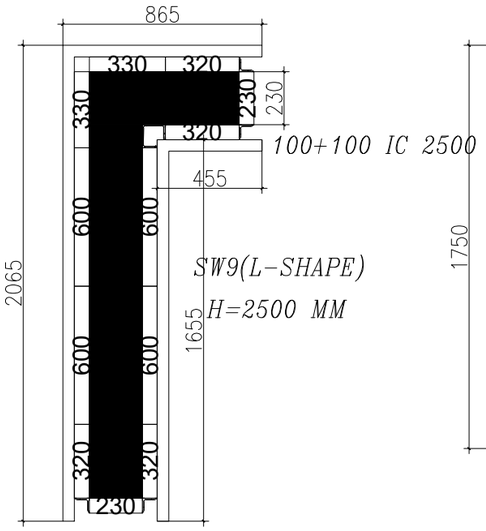

SW9(L-SHAPE)
H=2500 MM

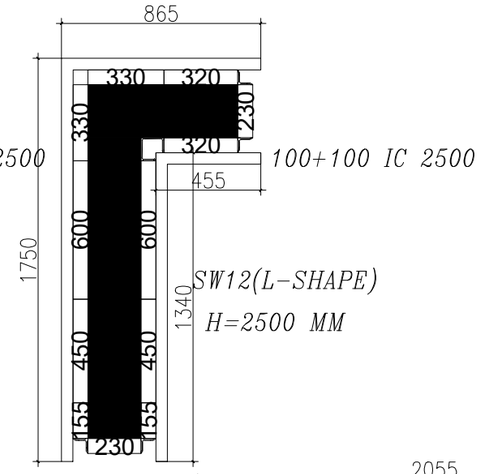

SW12(L-SHAPE)
H=2500 MM

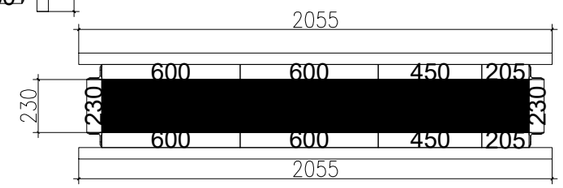

SW7(230X1855)
H=2500 MM

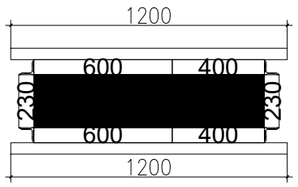

SW3(230X1000)
H=2500 MM

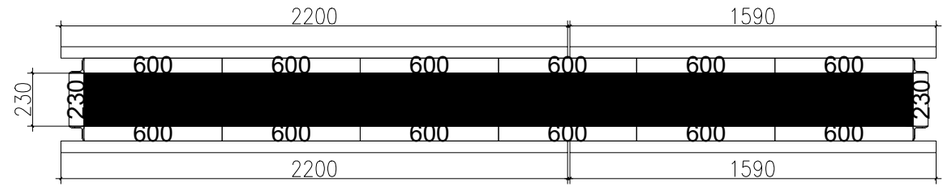

SW8(230X3600)
H=2500 MM

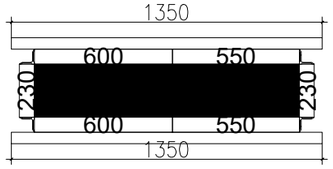

SW4(230X1150)
H=2500 MM

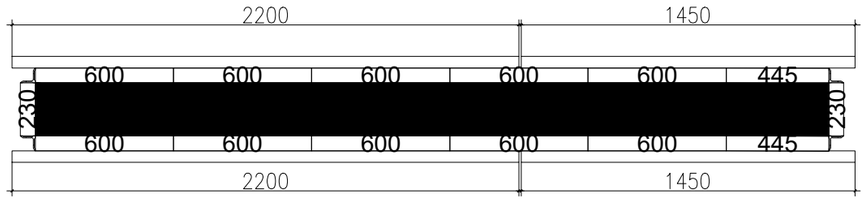

SW10(230X3445)
H=2500 MM

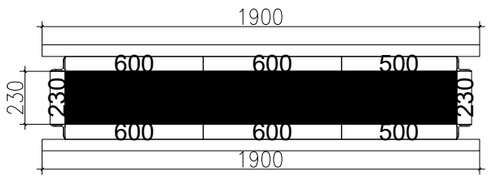

SW5(230X1700)
H=2500 MM

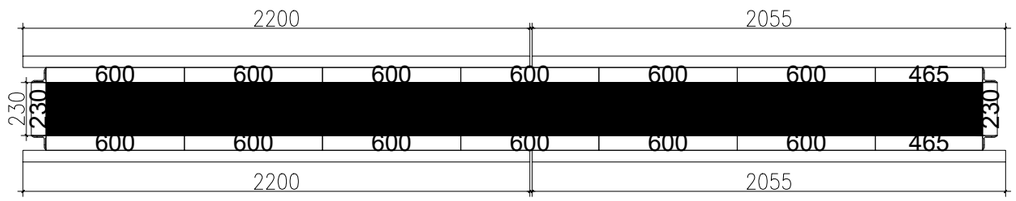

SW11(230X4065)
H=2500 MM

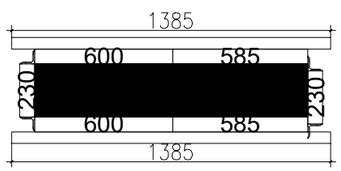

SW6(230X1185)
H=2500 MM

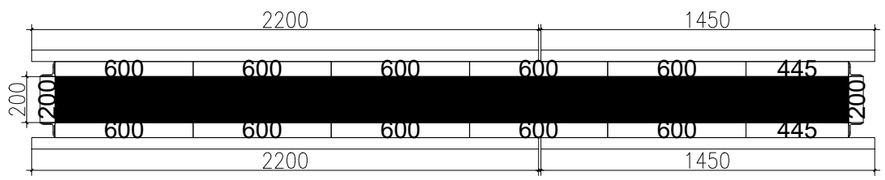

SW13(200X3445)
H=2500 MM

REV.	DATE	DESCRIPTION	BY	CHKD.

SS ALUMINIUM FORMWORK
YOUR FORMWORK SPECIALIST

CLIENT - MARCO GROUP

PROJECT -

TITLE - COLUMN WORKING

DWG.NO:- SS-AL-CW-01

SCALE	DATE	REV.
N.T.S	27-05-2025	00
DRAWN	CHECKED	APPROVED
MS	DJ	A.K.